Guaranteed Lab Grown Diamond Grading Certificate

Identification Data

September 22, 2021

LAB GROWN DIAMOND
Certificate No: 312530005

Gemprint

Gemprint is the unique optical fingerprint for positive identification of your lab grown diamond. Register your lab grown diamond at www.Gemprint.com and receive insurance discounts up to 10%.

Laser Inscription:

The illustration depicts enlarged and approximate appearances of the inscriptions. Girdle laser inscribed "GROWN IN THE USA BY WD", "PAT. 6,858,078", GCAL Logo and "LG312530005"

The 4Cs Grading Analysis

GCAL 312530005 — LAB GROWN DIAMOND*

Carat Weight:	1.10
Cut:	Very Good
Shape:	Princess
Measurements:	5.80x5.64x3.92mm
Optical Brilliance:	Excellent
Optical Symmetry:	Good
Polish:	Very Good
External Symmetry:	Very Good
Girdle Thickness:	Medium-Sl.Thick
Culet Size:	None
Color:	I
Fluorescence:	None
Clarity:	VS1
Identifying Characteristic(s):	Crystals,Clouds/Feathers
Characteristic Location(s):	Crown Step,Table/ Table,Crown Shoulder

*Comments: This laboratory grown diamond was created by the CVD (Chemical Vapor Deposition) method, and has the same chemical, physical, and optical properties as a mined diamond. This diamond is Type IIa, which means it is devoid of nitrogen impurities.

Photomicrographs:

Actual images of the crown (top) and pavilion (bottom) of this diamond photographed at magnifications up to 10x.

Light Performance Profile

Optical Brilliance Analysis:

Brilliance is the overall return of light to the viewer. The brilliance image is a representation of (a) white areas of light return, or brilliance, and (b) dark-blue areas of light loss.

Optical Brilliance
Excellent

Optical Symmetry Analysis:

The colored areas of the symmetry image are indications of light handling ability, giving a visual representation of proportions and facet alignment.

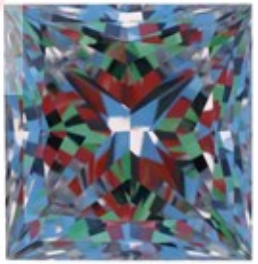

Optical Symmetry
Good

Proportion Diagram:

The proportion diagram illustrates the actual dimensions as recorded by optical scanning technology.

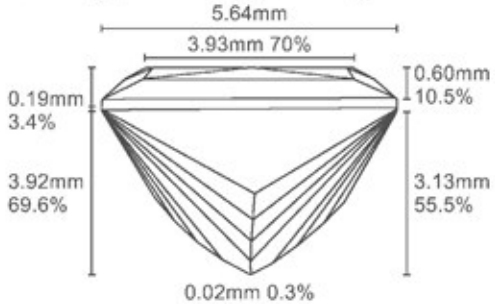

GCAL GEM CERTIFICATION & ASSURANCE LAB
ISO 17025 ACCREDITED FORENSIC LABORATORY
580 Fifth Ave LL-05
New York, NY 10036
T 212-869-8985
GCALUSA.com

ISO/IEC 17025 2017
ANAB L2177-1 Accredited Testing Lab

© Gem Certification & Assurance Lab, Inc.

ELECTRONIC COPY

© 2021 GCAL